FIXTUR LASER



FIXTUR LASER

Why Shaft Alignment?

- Studies over the past ten years indicate that 50% of all machine breakdowns are due to poor alignment.
- Some surveys indicate that up to 90% of all machines run outside their recommended tolerances.



FIXTUR LASER

Rotational centers

- All shafts, whether they are straight or bent, rotate on an axis called the rotational center.
- The rotational center forms a straight line.

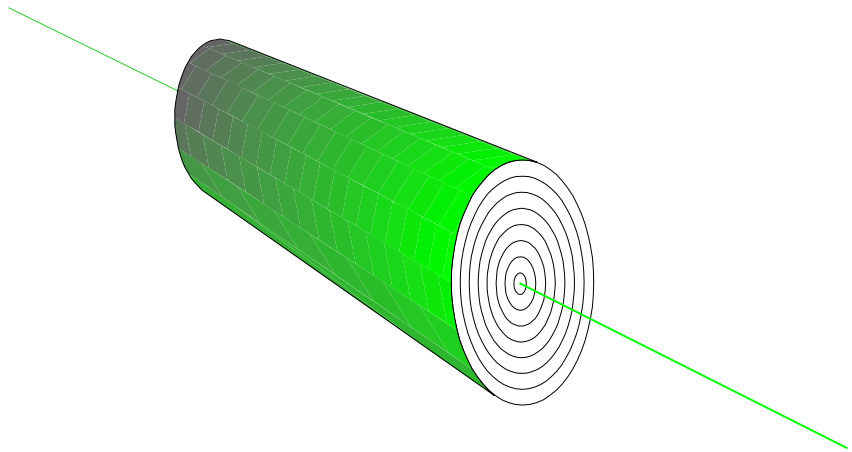

FIXTUR LASER

Misalignment

- **Shafts are misaligned when the two shafts are not collinear.**

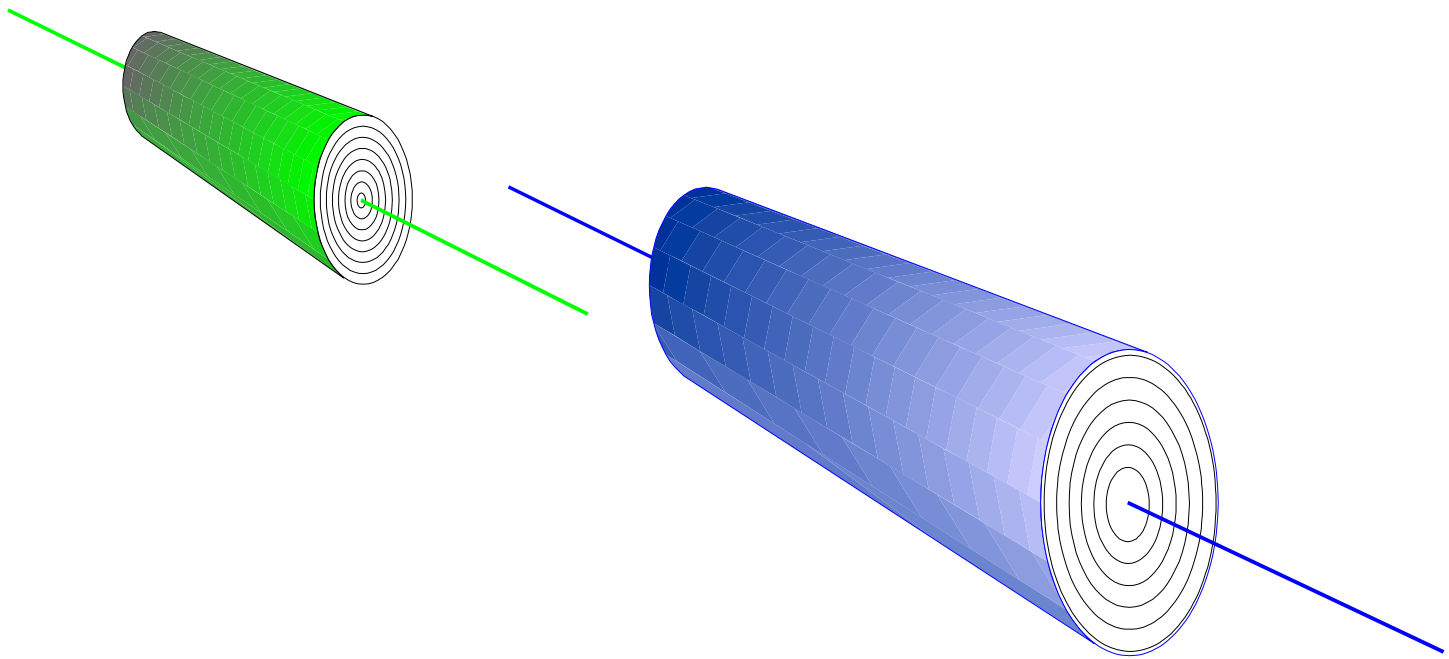

FIXTUR LASER

Types of misalignment

- **Offset misalignment**

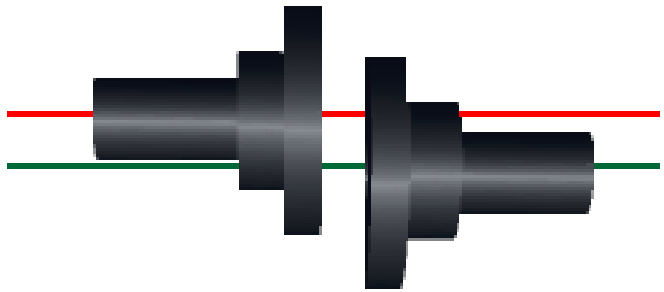

- **Angular misalignment**

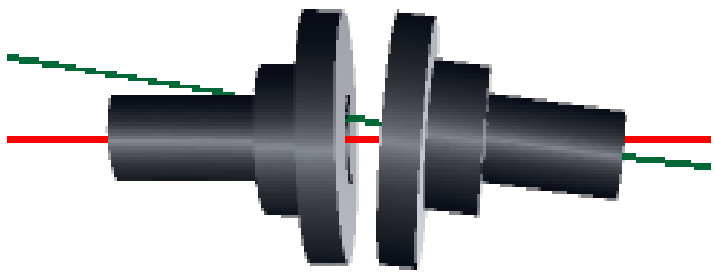

FIXTUR LASER

Measuring Misalignment

- Viewed from the top - Horizontal Misalignment

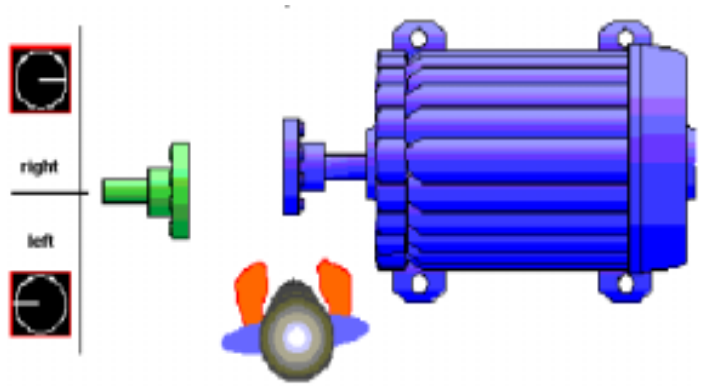

- Viewed from the side - Vertical Misalignment

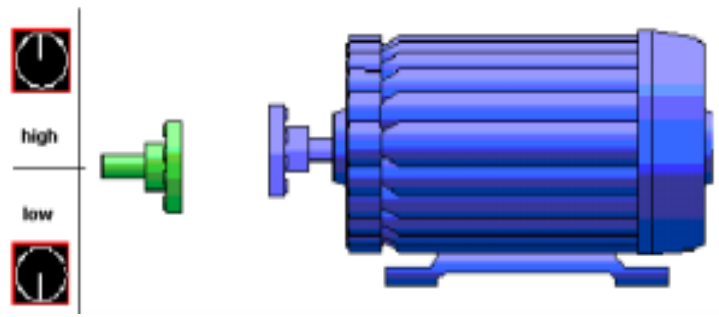

FIXTUR LASER

Benefits of Shaft Alignment

- Less vibrations
- Energy savings
- Less wear of mechanical components
- Increase production capacity
- Increase product quality

FIXTUR LASER

Vibrations

Major Sources of Machinery Vibration



FIXTUR LASER

Energy savings

- The correct alignment can reduce energy consumption with anything up to 15%, sometimes more.

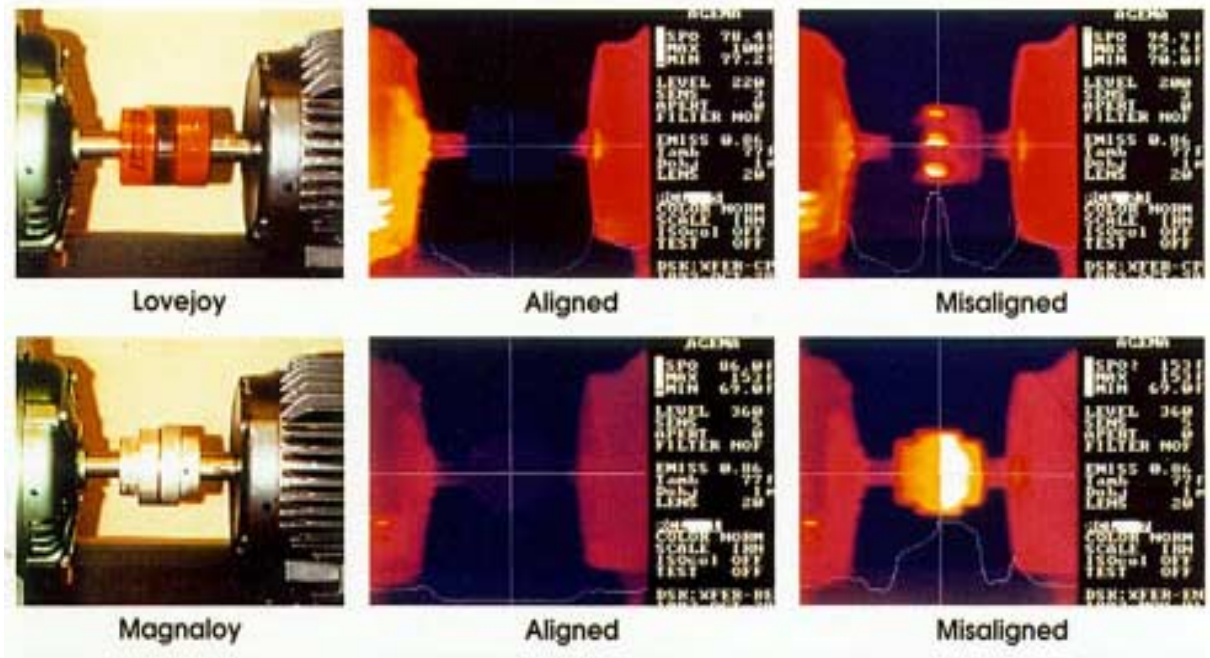

FIXTUR LASER

Energy savings

To calculate savings

- **Measure amperage before and after alignment**
- **Find the difference**
- **Get motor data**
- **Find cost of energy**
- **Calculate kW savings with formula below:**

$$kw = \frac{(volts * amps * pf * 1{,}732)}{1000}$$

FIXTUR LASER

Wear of mechanical components

Bearings



- Increasing the load will result in exponential bearing life reduction.
- Doubling the load will reduce the bearing life to one eight of its design life.
- Expected bearing lifetime is calculated according to:

$$L_{10} = \left[\frac{\text{Bearing constant}}{\text{Bearing load}}\right]^{3}$$

FIXTUR LASER

Wear of mechanical components

Seals

- Poor alignment can cause a 50%-70% reduction of calculated life time.
- Lubrication problems are often caused by leakage in the seals.

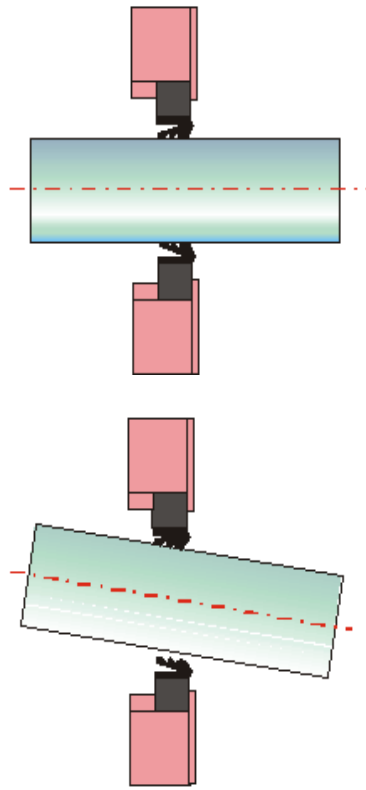

FIXTUR LASER

Production capacity

- Aligned machines are a necessity for high runability (competitiveness).
- Unplanned production stop cost 5-25 thousand USD / hour.
- Good alignment generally allows a speed increase with maintained quality

FIXTUR LASER

Product quality

- Decreased vibration levels reduce loads and wear on mechanical components
- Final product e.g. paper, steel, plastic film etc.

FIXTUR LASER

Focus today!

Vibration measurement & analysis

- **Laser based shaft alignment**
- **Special couplings and seals**
- **Calculation and measurement of foundations and base plates**
- **Special calculations for machines e.g. bearing dimension calculations**
- **etc...**

Despite all this, there are still problems...

FIXTUR LASER

Problems?

- Premature bearing wear / failure
- Premature coupling wear / failure
- Leaking seals
- High vibration levels
- etc..

This cause break downs, unplanned stops, reduced production capacity, increased maintenance cost etc.

Misalignment

FIXTUR LASER

Dynamic movement factors

- Thermal growth
- Pipe strain
- Movement in foundation
- Surrounding machines/process
- Air pressure, pressure in liquids etc.
- Sun light, wind other environmental factors
- Cooling system (fans, oil cooling etc..)

FIXTUR LASER

How can we assure good alignment?

- in cold condition
- in running condition

Measure

phase 1.
What is the position?

Align

phase 2.
Align the machine

-with rotational centers co-liniar in running condition

Document

phase 3.
Document the position

What's the problem? – example!

Installation of a blower

- Two machines with identical design
- Identical foundation
- Identically connected
- Same thermal growth compensation
- Installed next to each other



Result: 0,5 mm difference in position after start up.

FIXTUR LASER

Previous solutions?

Surveillance systems

- **Electro mechanic** (e.g. Acculign©)
- **Theodolite, optic systems**
- **Photogrammetri** (CCD-camera, targets, aktive diodes)
- **Laser based systems** (eg. Permalign©, Adcom)
- **Laser Trackers**
- **Load cell** (eg. Alstom Power)

FIXTUR LASER

OL2R measurement isn't widely spread, why?

- Demands special equipment
- Special arrangement of fixtures, targets, measure rig, reference objects etc.
- Time consuming and costly
- Special knowledge required
- Comprehensive calculation and evaluation of data required
- The result isn't easily translated for use with a shaft alignment system

Fixturlaser OL2R Fixture

- A handy and easy way to measure dynamic movement
- The Fixturlaser OL2R is a flexible system that work irrespective of:
  - OL2R = from cold to running condition

    OR
  - R2OL = from running to cold condition



Fixturlaser equipment required for OL2R measurement

- **Fixturlaser Alignment System**
  - **Software “Shaft alignment horizontal machines with OL2R”**



- **Fixturlaser OL2R Fixtures**
  - **Fixture which makes it possible to measure two machines relative position from static to dynamic state**



FIXTUR LASER

How does it work?

- A point close to the shaft will move as the shaft when exposed to dynamic movements
- We will measure the relative movement between to points close to their respective shaft
- The relative movement, the difference in their position between hot and cold condition, is equal to the relative movement of the two shafts.

FIXTUR LASER

Fixture assembly, step 1



Mounting tabs

- If you don’t like drilling in your machines
- Consists of:
  - Two pcs mounting tabs in stainless steel
  - One set of epoxy



FIXTUR LASER

Fixture assembly, step 2



FIXTUR LASER

Assembly of TD units, step 3

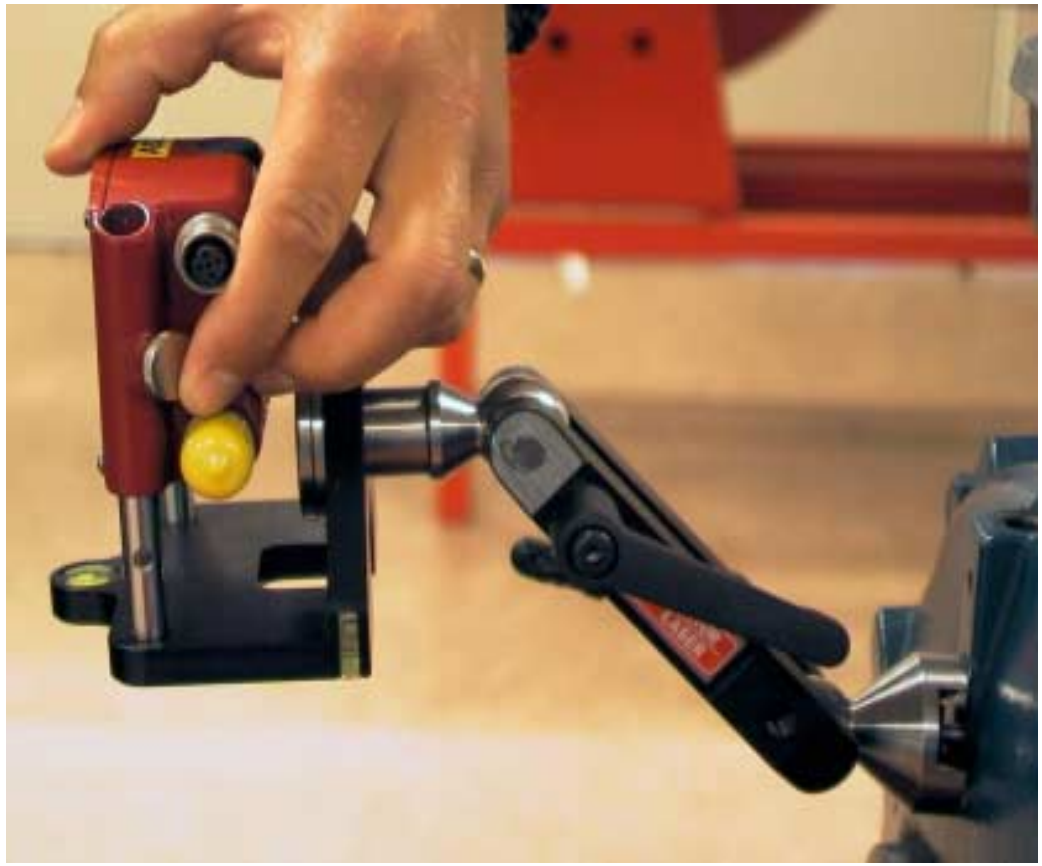

FIXTUR LASER

Adjusting the fixture



FIXTUR LASER

Rough alignment of laser, step 1

- **Adjust the laser ~90° to PSD**

- **Cone the laser, by focus the beam, with the blue thumb wheels, in one point at long distance during 180 ° rotation**

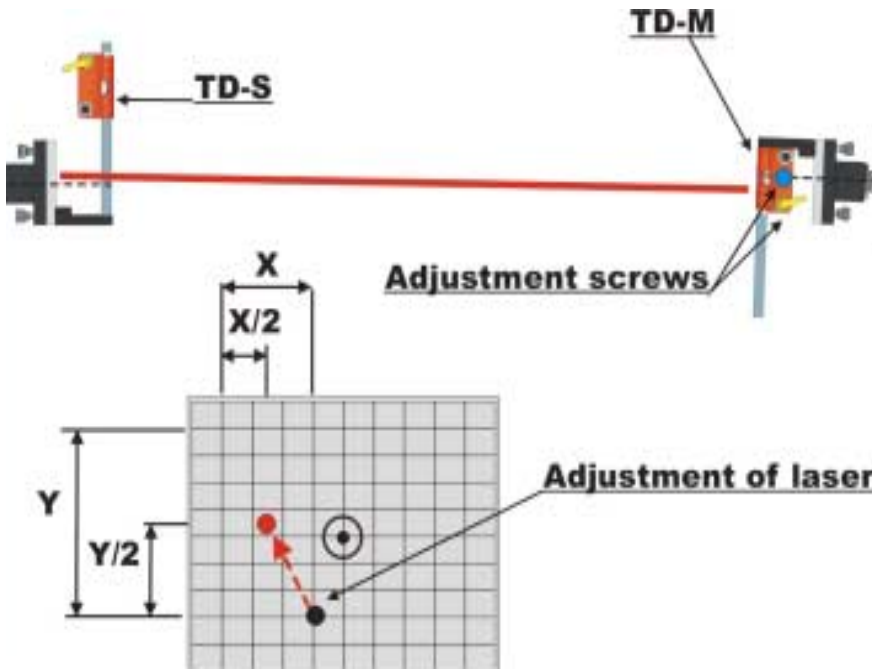

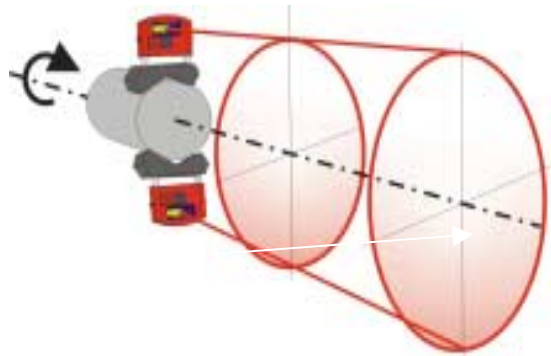

FIXTUR LASER

Adjust the laser beam to hit the center of the PSD



FIXTUR LASER

Start the display unit and select the “OL2R” program

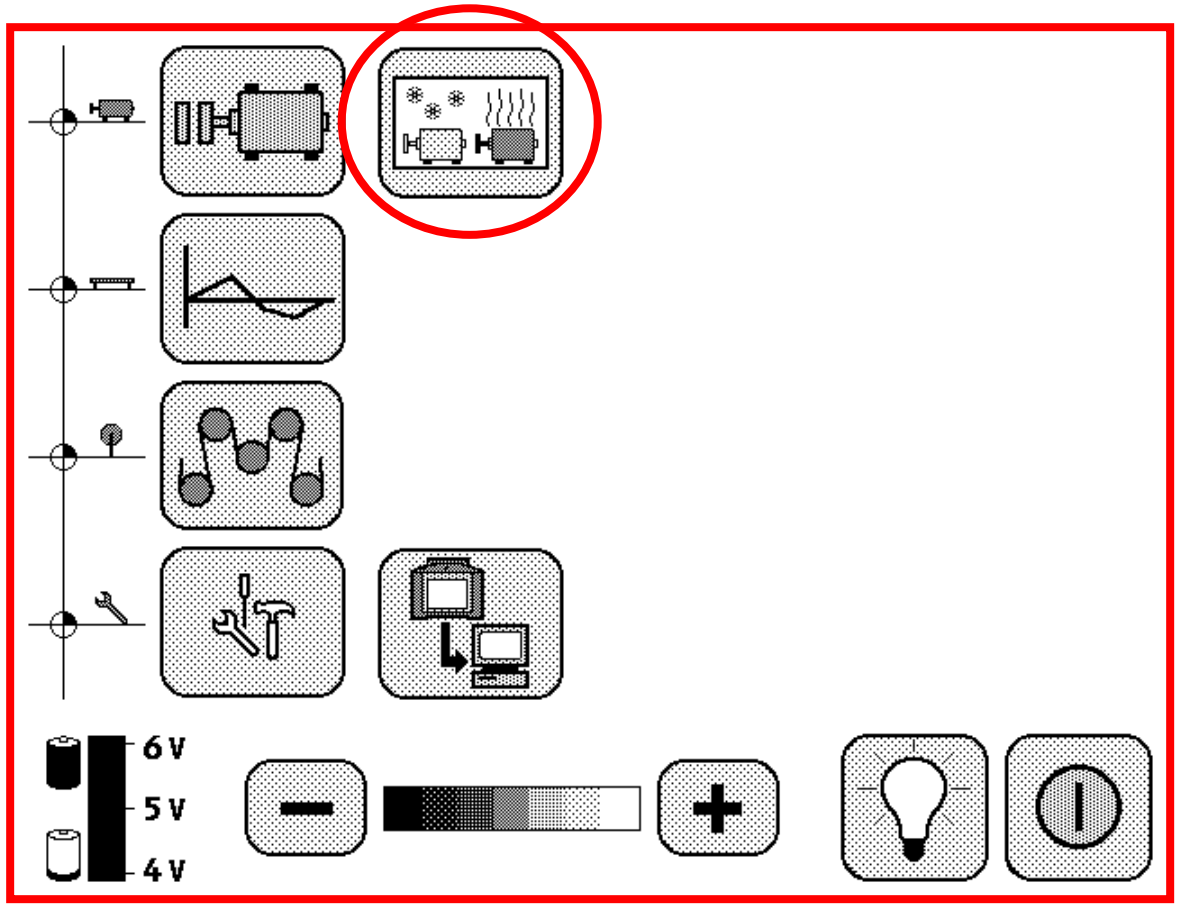

FIXTUR LASER

Start menu

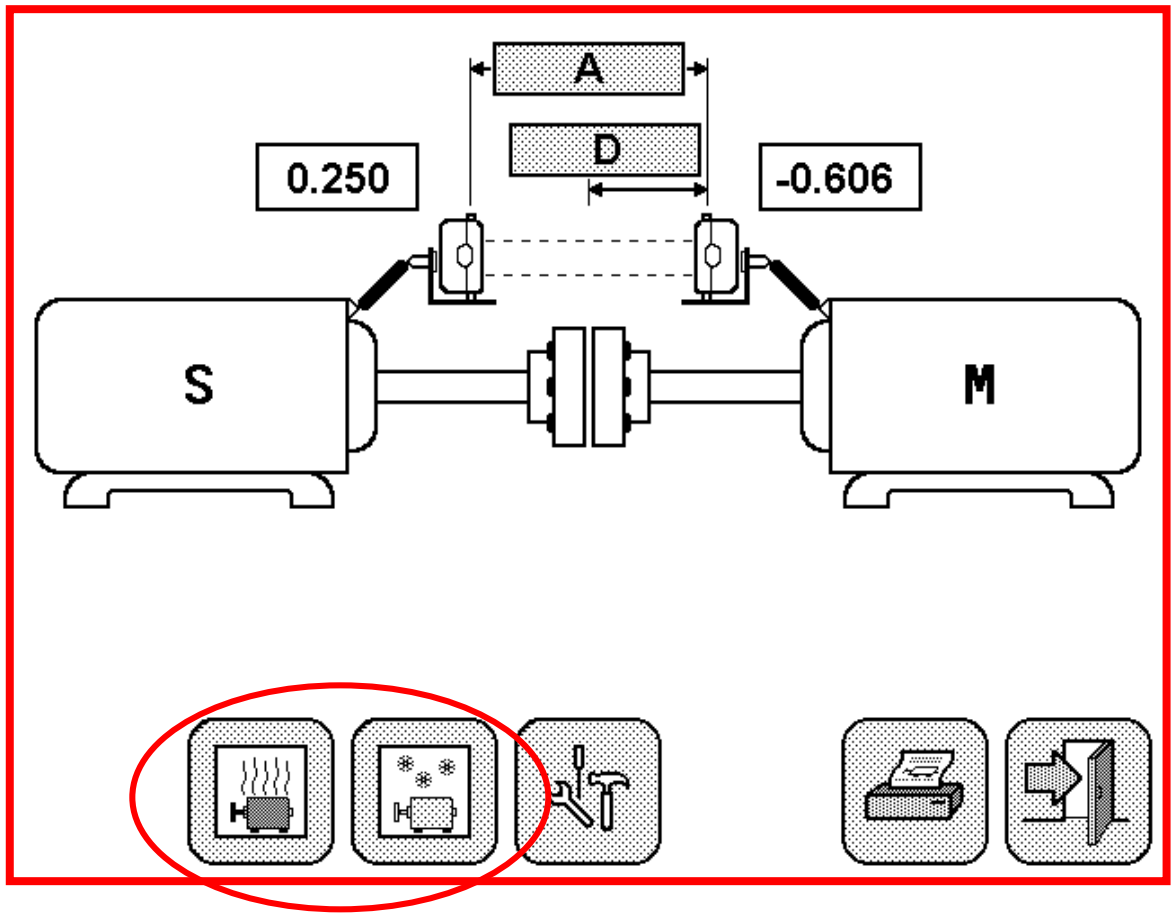

FIXTUR LASER

9 o'clock in cold condition

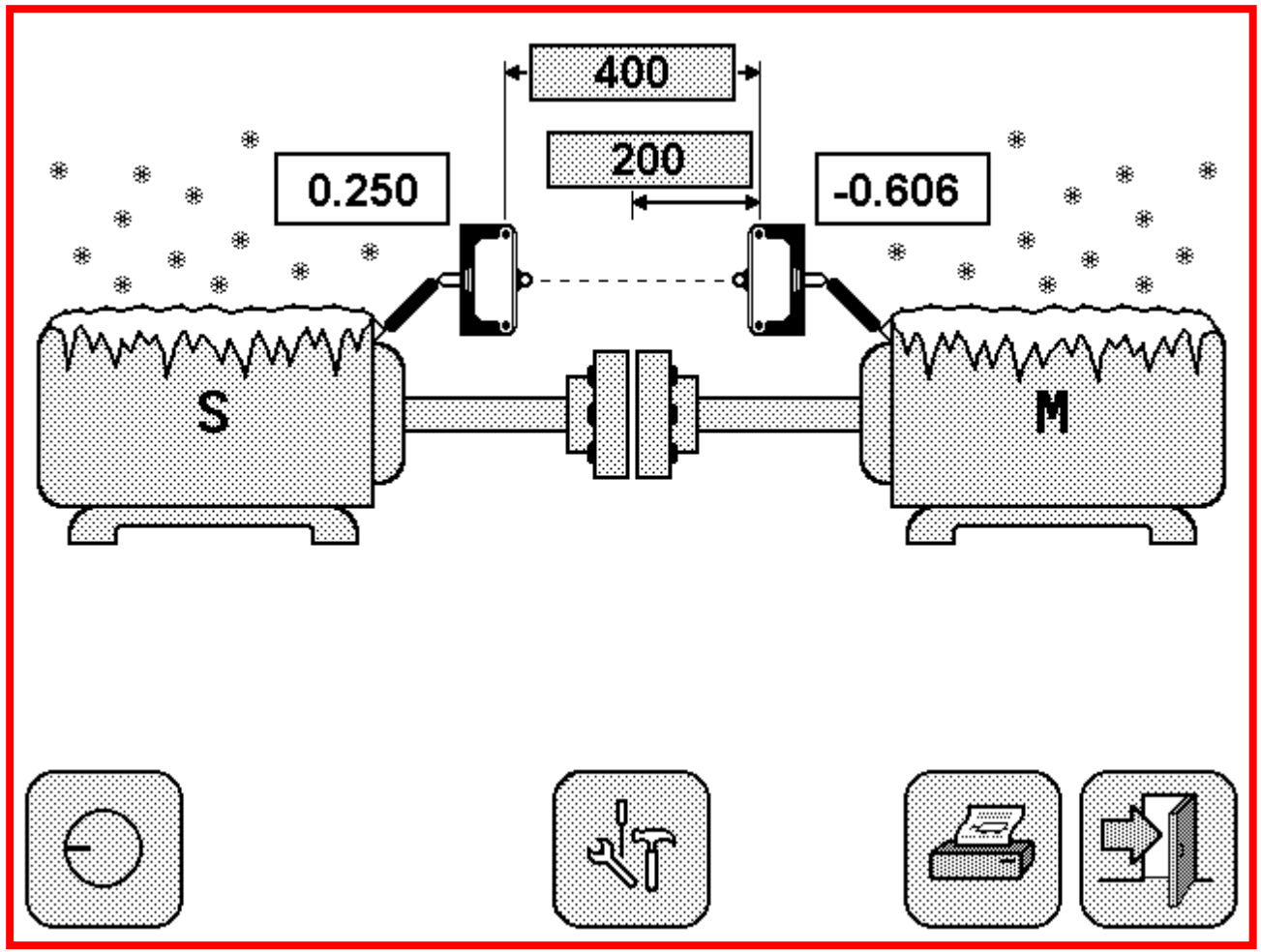

FIXTUR LASER

3 o'clock in cold condition

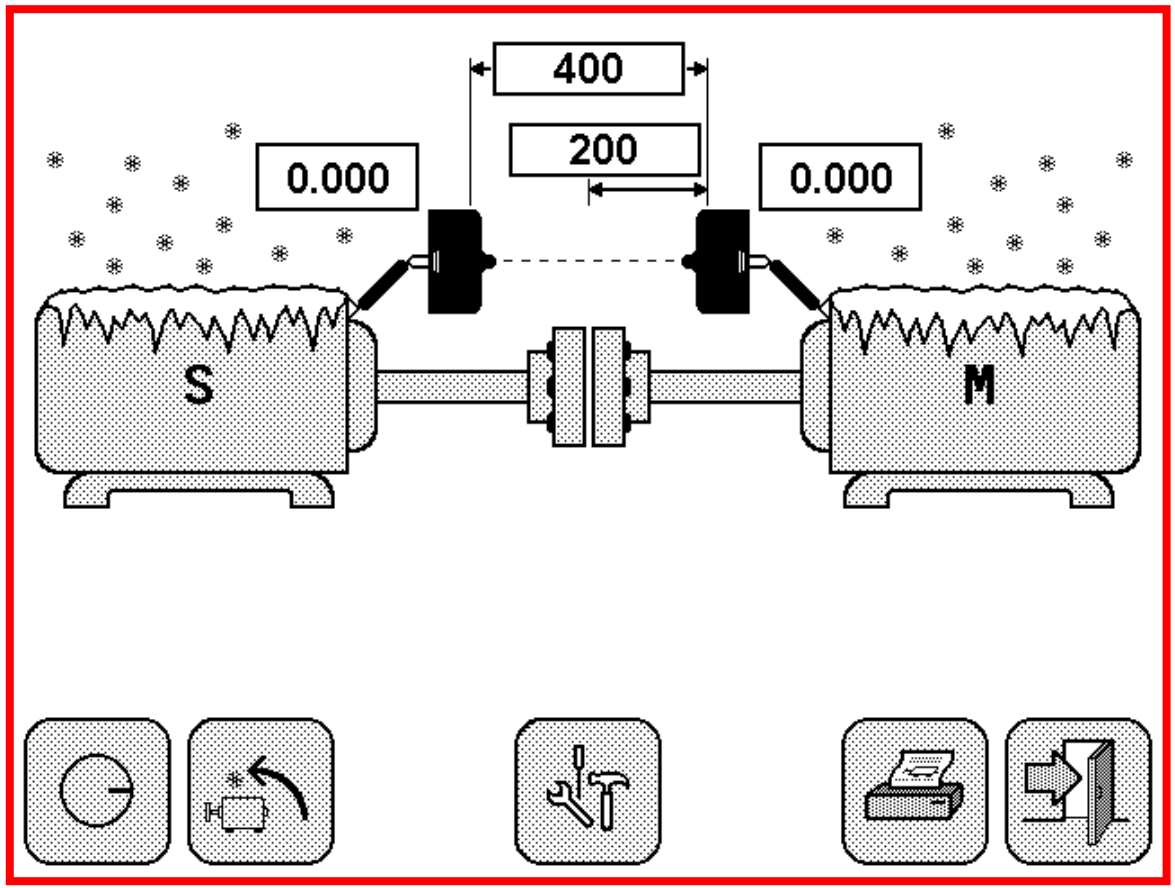

12 o'clock in cold condition

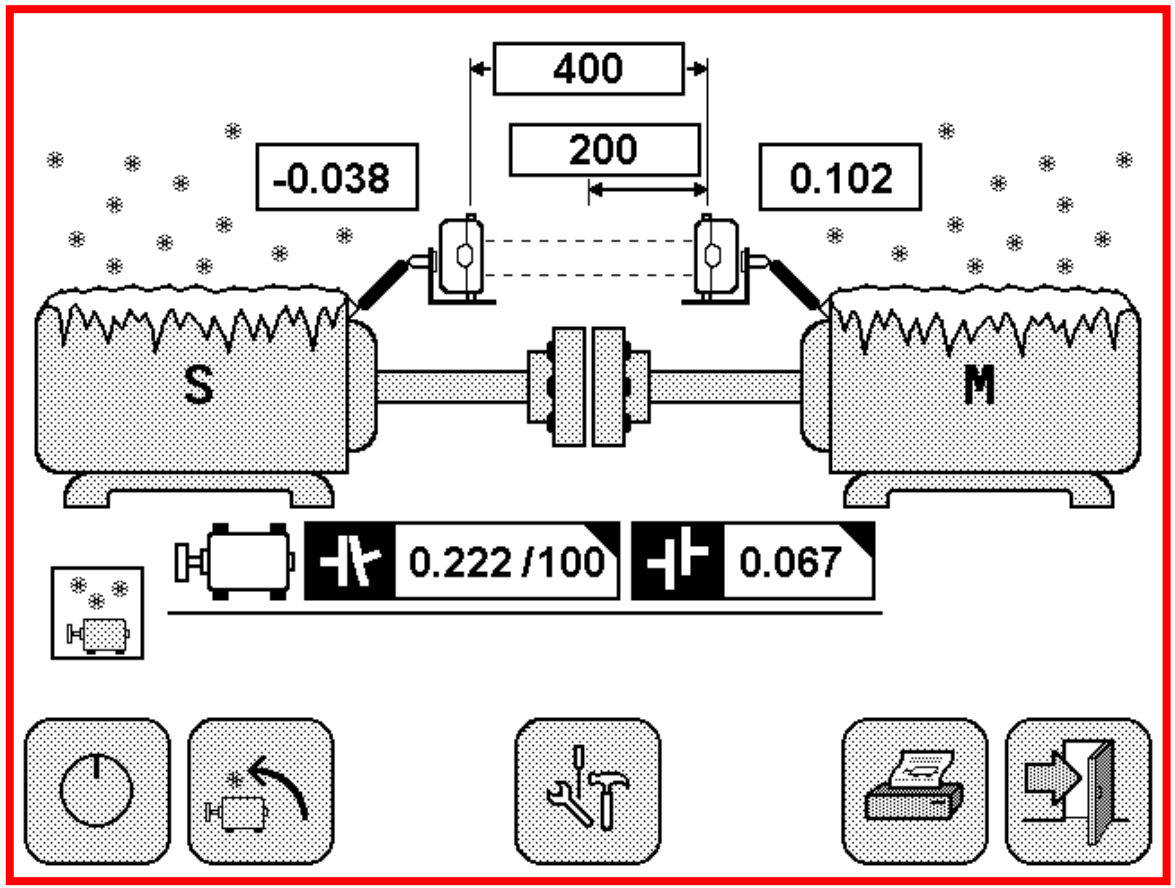

FIXTUR LASER

Result to from cold measurement

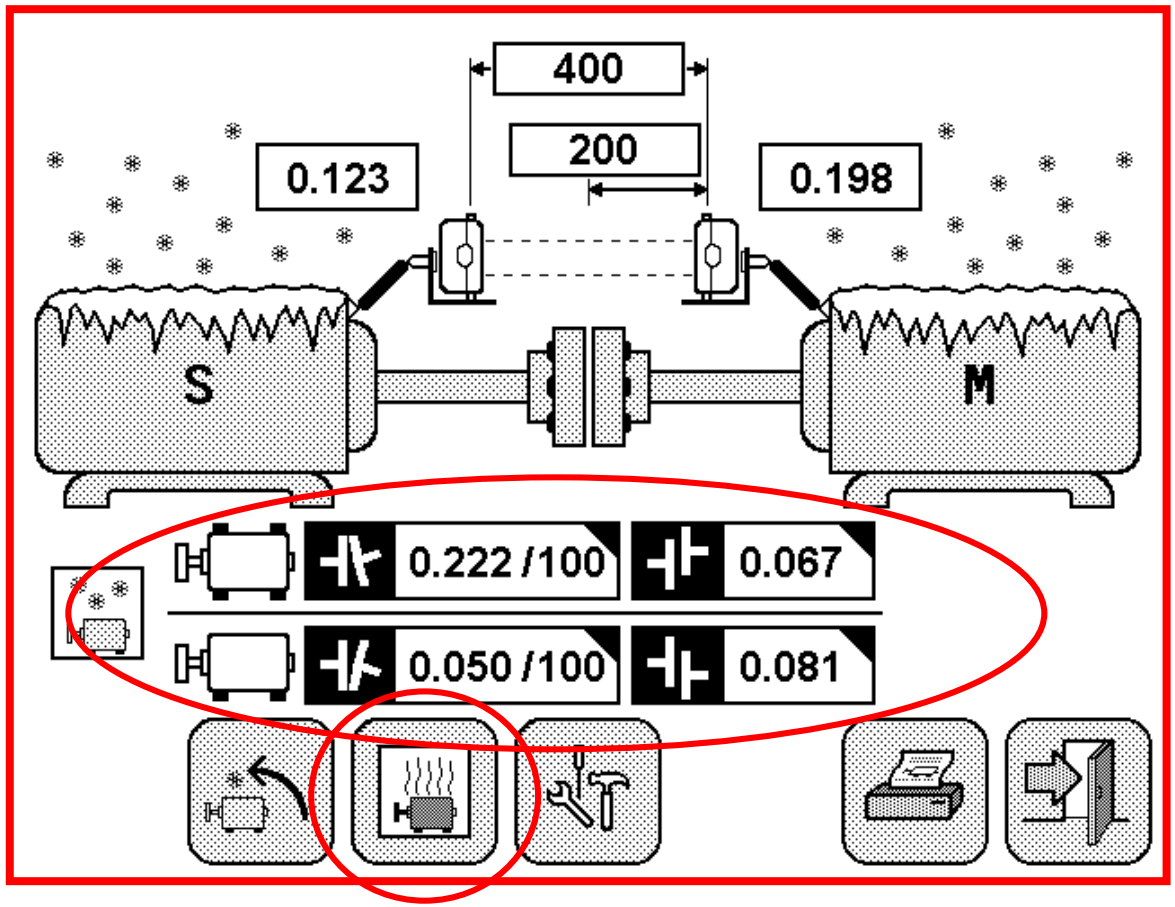

FIXTUR LASER

Start the machine!

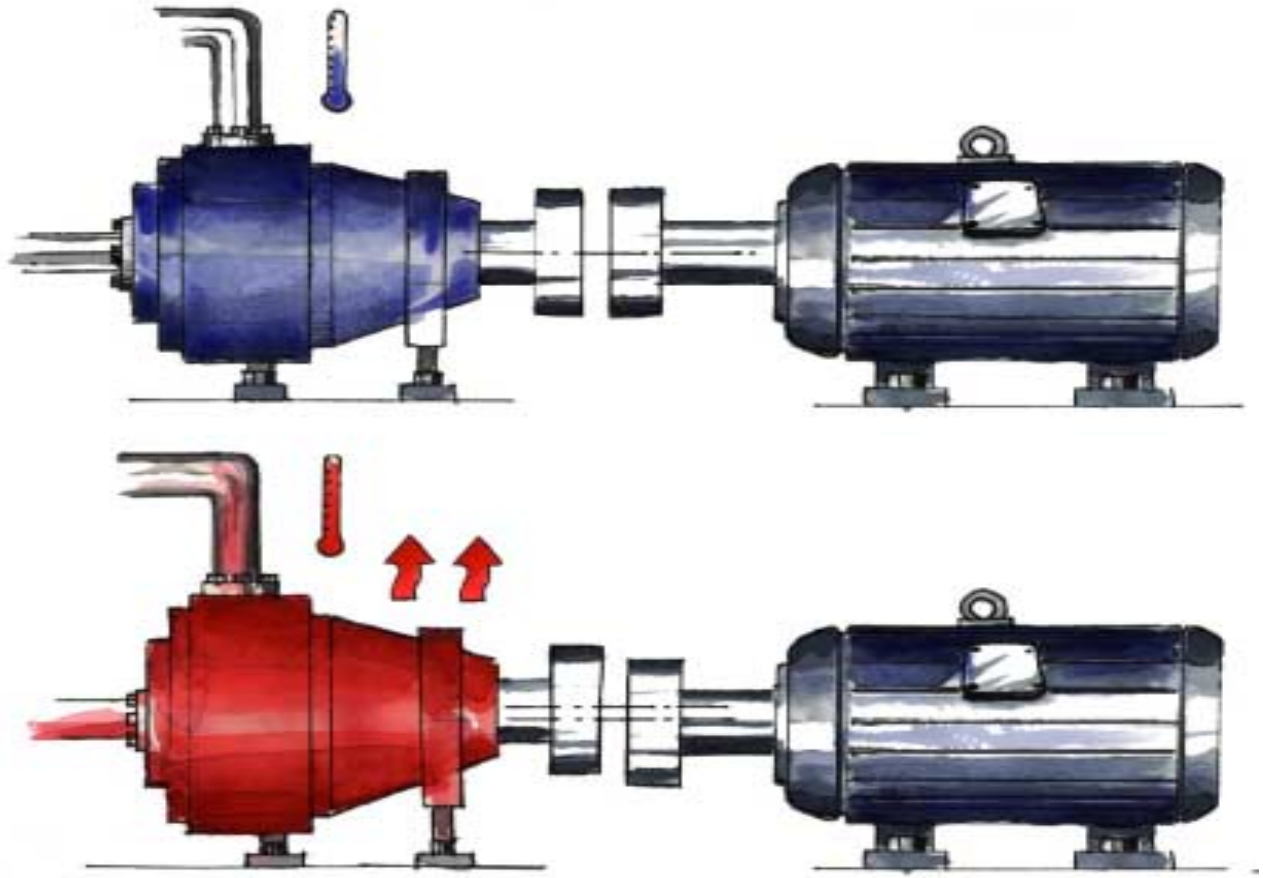

FIXTUR LASER

Repeat in warm

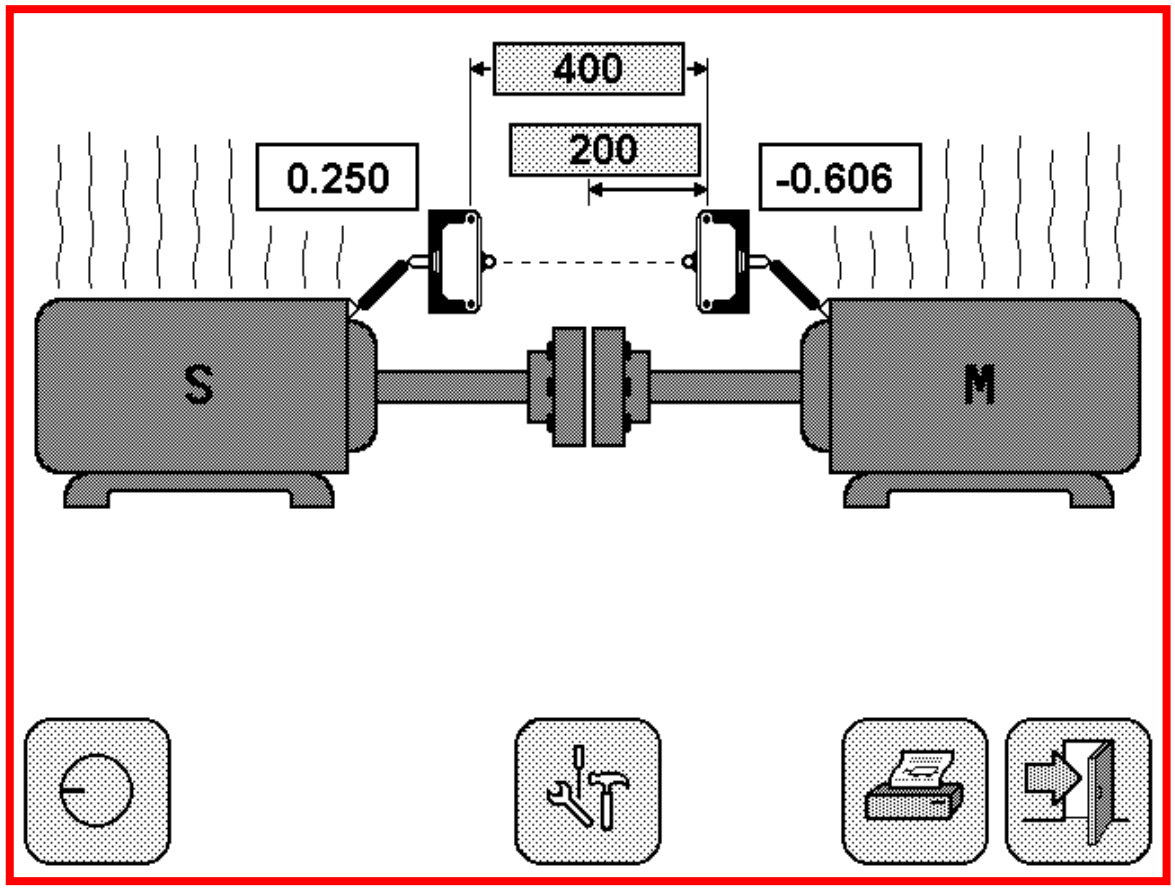

FIXTUR LASER

Result to from hot measurement

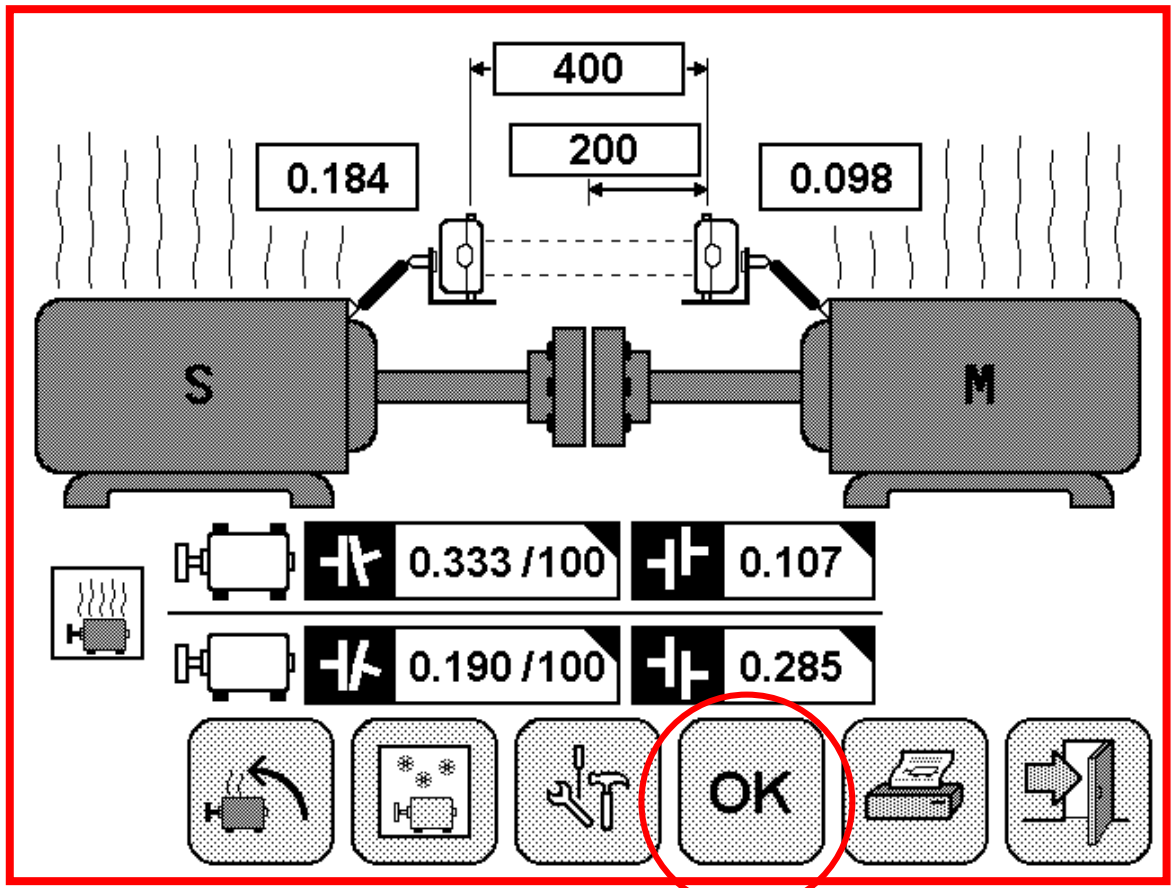

FIXTUR LASER

Actual misalignment for thermal growth

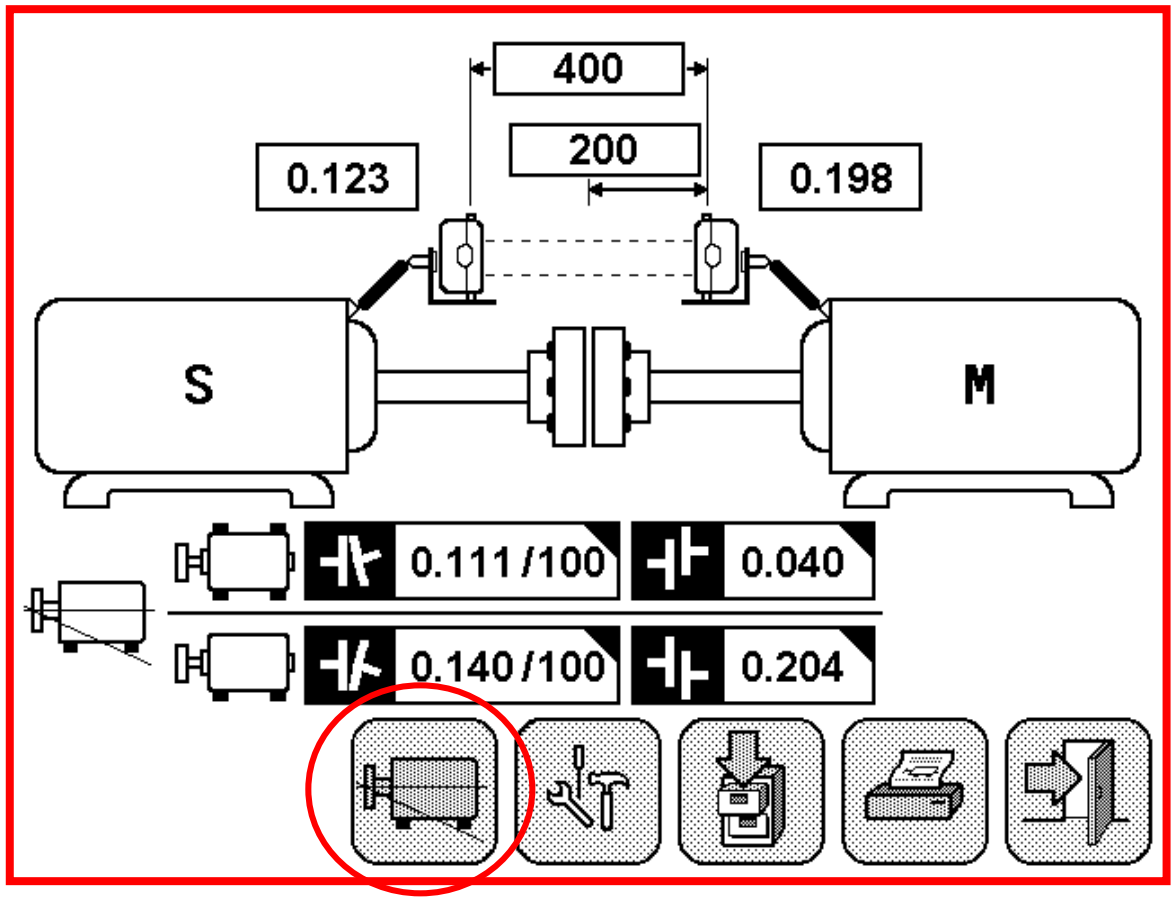

FIXTUR LASER

Align with the thermal offset

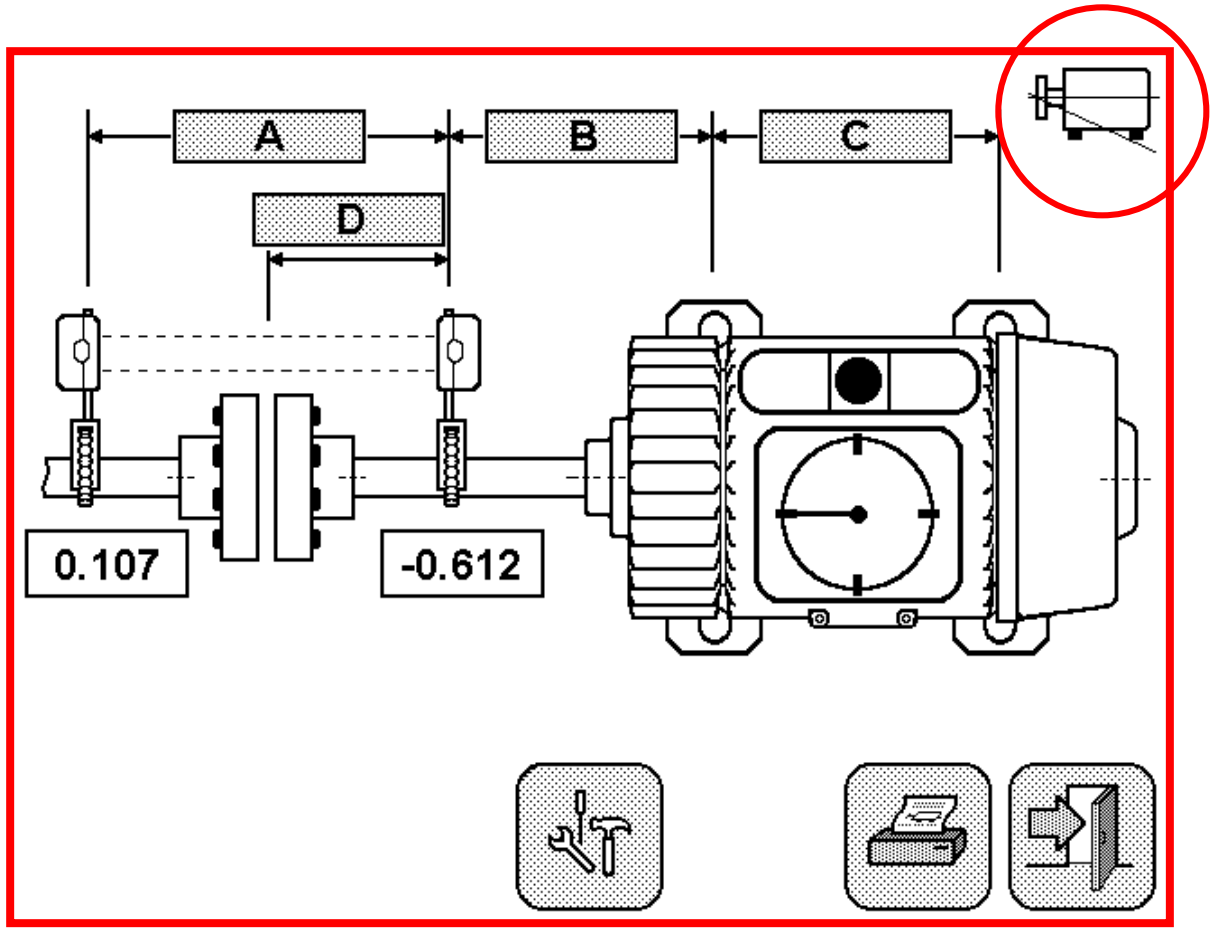

FIXTUR LASER

Actual misalignment for thermal growth- Alternative

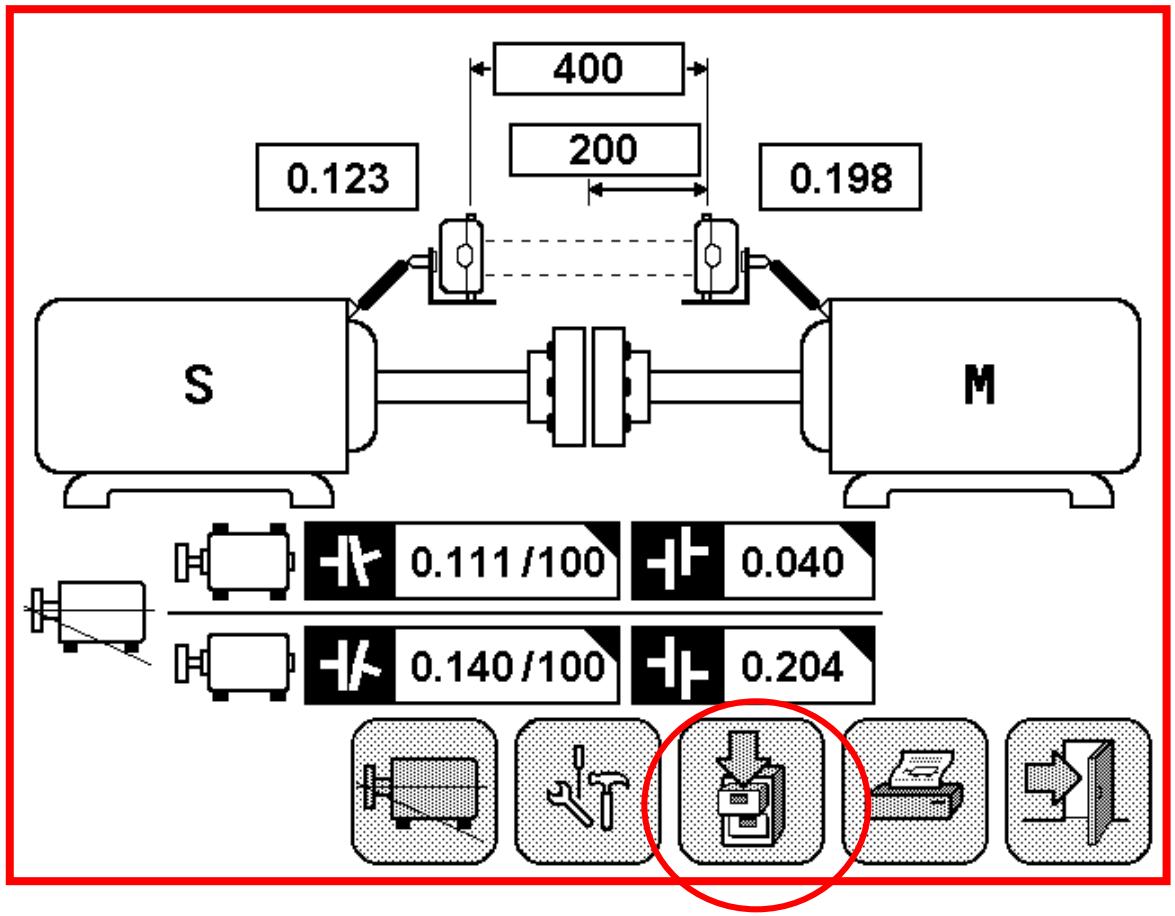

FIXTUR LASER

Press Icon in memory to recall thermal offset to align mode

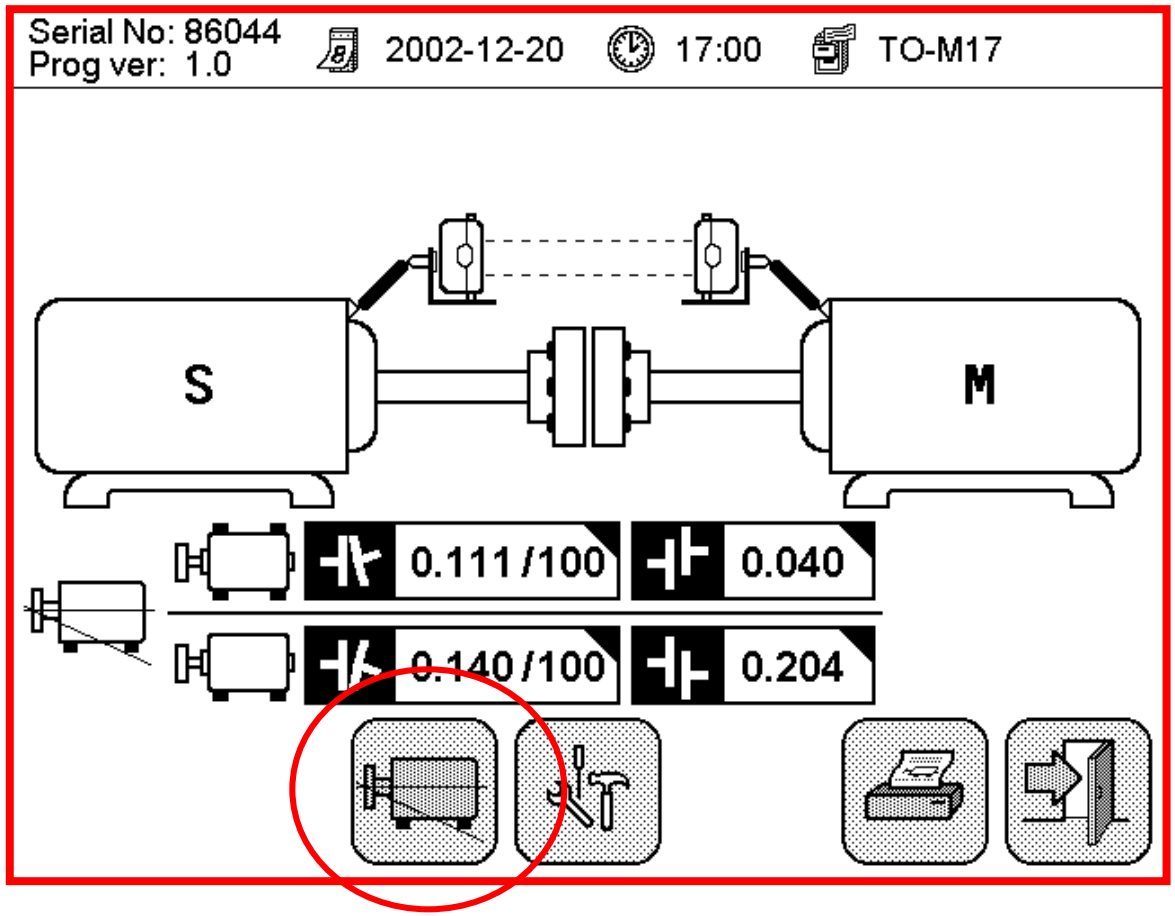

FIXTUR LASER

Ready to align- with Thermal offset

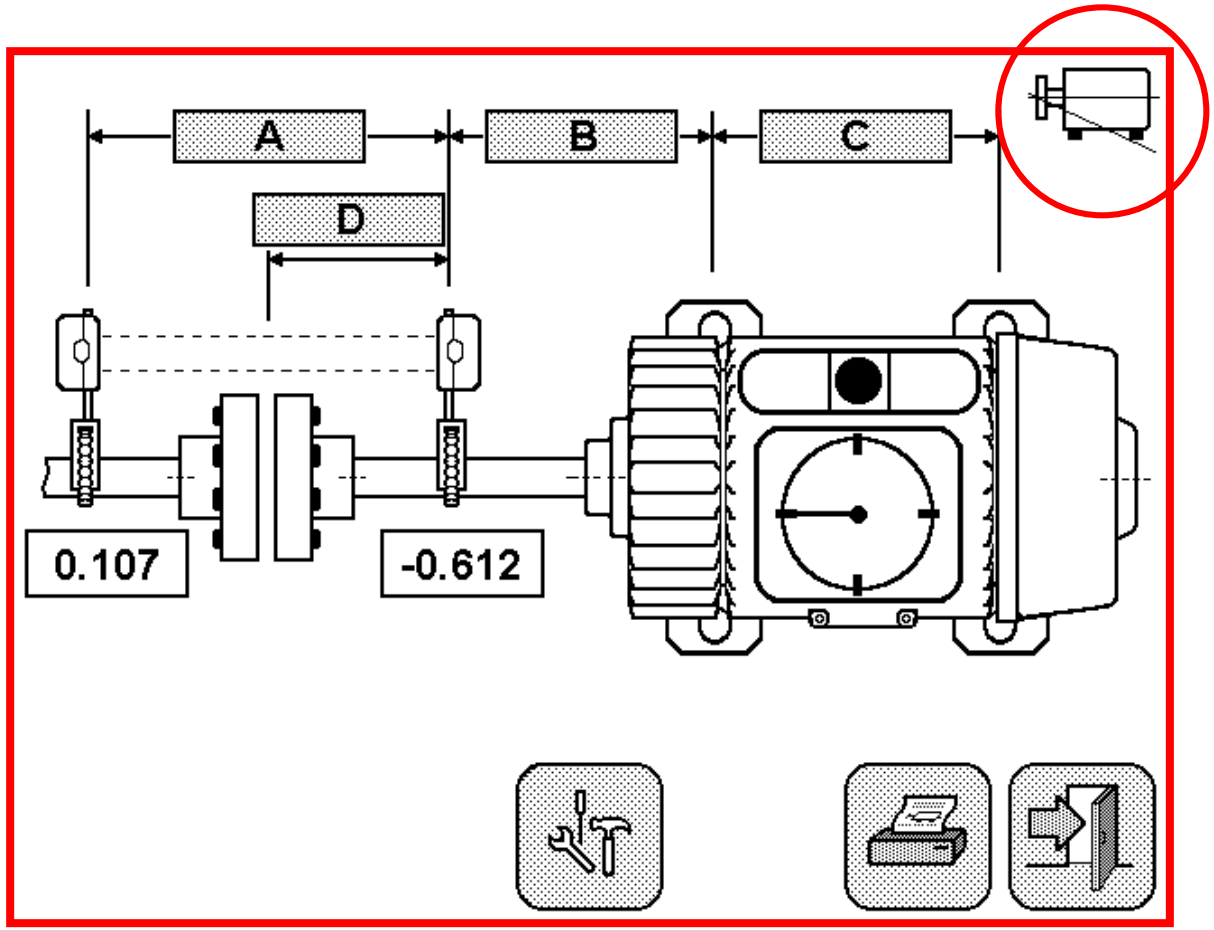

global line up

FIXTUR LASER

Shaft Alignment

1. MEASURE

2. ALIGN

3. DOCUMENT

1) Assemble the equipment on the shafts and enter the horizontal alignment program

2) Enter the A, B & C measures

3) The ”Thermal growth” compensation factors from the OL2R measurement are already inserted

4) Measure with Clock or TriPoint method

global line up

FIXTUR LASER

Shaft alignment

1. MEASURE

2. ALIGN

3. DOCUMENT

1) Align the movable machine, using the foot vales, to ”zero”

2) The machines are now aligned, and the shaft rotational centers are co-linear in running condition

global line up

FIXTUR LASER

Shaft alignment

1. MEASURE

2. ALIGN

3. DOCUMENT

1) Document the alignment with the printer or Fixturlaser Documenter software

FIXTUR LASER

Alignment with Fixturlaser OL2R?

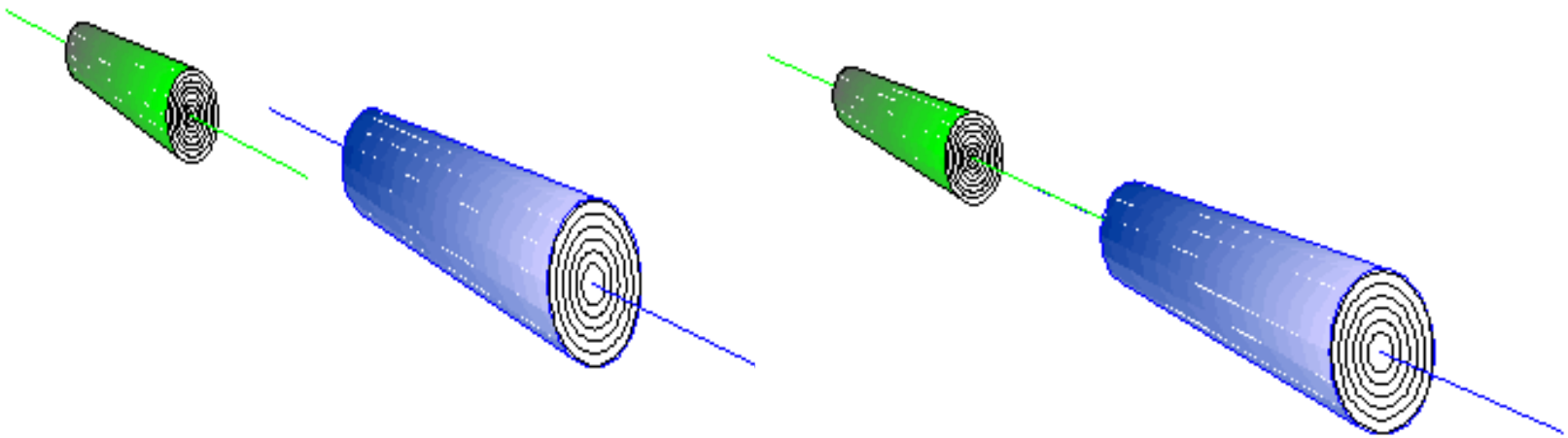

...in ”cold” condition ... in running condition !

Fixturlaser OL2R program

- Now standard in the Fixturlaser Shaft 200 package
- Available as component in Multichoice software